IN THE MATTER of -

PCT Patent Application No:	PCT/AU2012/000179
In the Name of:	OPTIMIZED ORTHO PTY LTD
Entitled:	A COMPUTER-IMPLEMENTED METHOD, A COMPUTING DEVICE AND A COMPUTER READABLE STORAGE MEDIUM FOR PROVIDING ALIGNMENT INFORMATION DATA FOR THE ALIGNMENT OF AN ORTHOPAEDIC IMPLANT FOR A JOINT OF A PATIENT

Statement Concerning Amendments

The claims are amended to comprise First Independent Claim Group comprising claims 1 to 28 (and claims 29 and 30 referencing claims 1 to 28), comprising the limitations of prior claims 1 to 271, and Second Independent Claim Group comprising claims 31 to 38, comprising the limitations of prior claims 328 to 354.

For the first claim group, the claim limitations of claims 20 to 24 relating to desired post-implant activities (and those of the analogous dependent claims of the other prior independent claims) are incorporated into the independent claim on account of their having already been acknowledged by the examiner as being novel. As such, on the face of it, the First Independent Claim Group is new, wherein the Examiners reservations as to inventiveness are addressed in the accompanying arguments.

The objection relating to the alleged separate inventions 1 to 93, 94 to 157, 158 to 179, 180 to 270, 271 to 325 have been addressed by their inclusion into the First Independent Claim Group, with the prior unique limitations of these prior independent claims being presented in dependent claims 2, and 5 to 8 (e.g. alignment of an orthopaedic implant, actual 3D model data of the joint, modelling data of the alignment of an orthopaedic implant, selection of an orthopaedic implant, manufacturing implant parameter data for manufacturing an orthopaedic implant and manufacturing parameters for manufacturing a patient specific jig). Furthermore, the Second Independent Claim Group makes reference to the First Independent Claim Group. As such, the current claims are unified.

The Second Independent Claim Group comprising claims 31 to 38 comprise the prior limitations of claim 328, already having been acknowledged by the examiner as being novel. Furthermore, for the reasons of the accompanying arguments supporting the novelty of claims 1 to 28, so too are claims 31 to 38 novel and inventive for at least their reference of claims 1 to 28.

IN THE MATTER of -

PCT Patent Application No:	PCT/AU2012/000179
In the Name of:	OPTIMIZED ORTHO PTY LTD
Entitled:	A COMPUTER-IMPLEMENTED METHOD, A COMPUTING DEVICE AND A COMPUTER READABLE STORAGE MEDIUM FOR PROVIDING ALIGNMENT INFORMATION DATA FOR THE ALIGNMENT OF AN ORTHOPAEDIC IMPLANT FOR A JOINT OF A PATIENT

Arguments

The claimed invention, as amended, relates to generating possible parameter data using a physics engine simulation (deterministic patient specific rigid body mechanics simulation) and the selection of parameter data from the possible parameter data in accordance with the desired post-implant activities. Such may be represented pictorially:

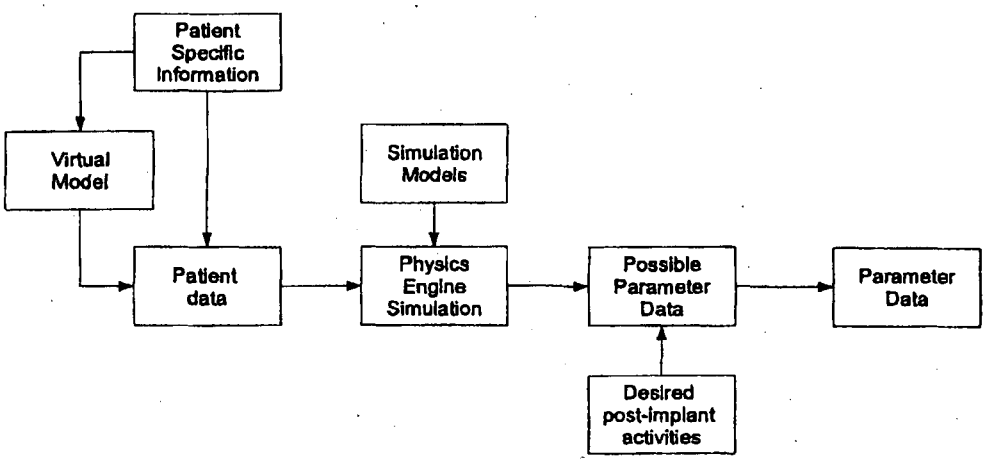

In simple terms, the claimed invention simulates differing implant parameter data using a physics engine, and then uses desired post-implant activities to select the most suitable of the implant parameter data. As will be apparent from at least the below, such a method is novel and inventive in light of the prior art on record.

The above methodology is enumerated at least in the following paragraphs of the present specification (emphasis added):

- Paragraph 512: ... and library design data that are indicative of a set of available predetermined **simulation models** for the movement of a generalized and idealized joint during a respective predetermined post-implant activity...
- Paragraph 517:... receive, via the data interface (180, 140), **patient specific information data** specific to the patient....The processor 1000 is further controlled by the computer program code, at step 320, to **calculate patient data** according to the patient specific information data contained within the patient file 7.
- Paragraph 523:... the patient file 7 comprises first and second data 15 and 16. Data 15 includes information records indicative of one or more **dynamic characteristics** and data 16 includes information records indicative of one or more static characteristics.
- Paragraph 524:...The **dynamic characteristics** of the joint comprise data in the form of a **virtual prediction**, namely a **computer model prediction** based on joint kinematics data, joint loading data, and joint articulation behaviour data in response to particular movements, patient specific loads, moment arms, contact stresses, external forces, and muscle forces, amongst others, associated with the patient's desired post-implant activities
- Paragraph 534: At step 330, the processor 1000 is further controlled by the computer program code to **calculate the alignment information data** for aligning the orthopaedic implant for the joint according to the patient data. In this step, the patient data is retrieved from the database 1030 and a **deterministic patient specific rigid body mechanics simulation** is performed on the patient data using a **physics engine**, that is, a simulation of the joint using multi-body simulation software.
- Paragraph 537: At step 340, the processor 1000 is controlled by the computer program code to receive, via the data interface (180, 140), patient acquired data 58 indicative of one or more **desired post-implant activities** of the patient.
- Paragraph 543: At step 350, once the patient acquired data 58 has been input by the user, the processor 1000 is controlled by the computer program code to calculate a set of **possible alignment information data** according to the **patient data** and the **patient acquired data 58**. In this step, the simulation of the joint is tested against the patient acquired data 58 with respect to the post-implant activities. This is known as the improvement approach.
- Paragraph 544: At step 360, the processor 1000 is controlled by the computer program code to **select alignment information data** from the set of **possible alignment information data** according to the **post-implant activities preference data**...

Referring now to the Examiner's comments, the Examiner asserts that D1 discloses the use of a patient's anthropometric data (e.g. age, BMI, weight) along with patient-specific imaging data for a computer program simulating biomotion of the patient's joints (e.g. knee joint or ankle joint), wherein the biomotion model simulates various daily life activities which are considered to be post-implant activities (paragraphs [0137]-[0140] of D1).

However, D1 recites at paragraph [0136] "In certain embodiments, bone cuts and implant shape including at least one of a bone-facing or a joint-facing surface of the implant can be designed or selected **to achieve normal joint kinematics**." (emphasis added)

In other words, the embodiments referred to by the examiner in D1 is for the purposes of attaining normal joint kinematics, such as, for example, joint kinematics associated with the average western male, aged 29. As is evident, this embodiment, by aiming to achieve normal joint kinematics is therefore **not patient specific**.

Conversely, the claimed invention selects alignment data in accordance with **post-implant activity**, as opposed to normal joint kinematics, and is therefore patient specific.

For at least the reason that D1 is not patient specific, it is submitted that the claimed invention is novel and inventive in light of D1, alone or considered in combination with the CGK or the other prior art of record.

Furthermore, D1 recites at paragraph 0139 "The biomotion model can simulate various activities of daily life including normal gait, stair climbing, descending stairs, running, kneeling, squatting, sitting and any other physical activity."

In other words, the biomotion model of D1 simulates various post-implant activities for the purposes of selecting various implant parameters.

Conversely, the claimed invention recites simulation to generate possible parameter data, and <u>then</u> the selection of parameter data from the possible parameter data in accordance with desired post-implant activities (such as stair climbing, descending stairs, running, kneeling, squatting, sitting and any other physical activity).

For at least the reason that D1 fails to disclose the generation of possible implant parameters and the selection of the optimal implant parameter in accordance with desired-port implant parameters, it is submitted that the claimed invention is novel and inventive in light of D1, alone or considered in combination with the CGK or the other prior art of record.

In summary, the prior art of record fails to anticipate or obviate the features enumerated in claim 1 of:

- determining **a set** of possible parameter data according to the patient data and patient acquired data (e.g. using a deterministic patient specific rigid body mechanics simulation); and
- selecting the implant parameter data from the set of possible parameter data according to post-implant activities preference data.

The claims depending from claim 1 are therefore novel and inventive too at least on account of their dependence from claim 1.

As such, it is submitted that the claimed invention, as amended, is both novel and inventive in light of the cited references.

PCT/AU2012/000179
Received 04/09/2012

Claims

1. A computer-implemented method for providing implant parameter data, the computer-implemented method comprising the steps of:

   - being responsive to patient specific information data for deriving patient data, the patient specific information data being indicative of one or more dynamic characteristics;

   - determining a set of possible implant parameter data according to the patient data and patient acquired data, the patient acquired data being indicative of one or more desired post-implant activities, the patient acquired data comprising post-implant activities preference data;

   - selecting the implant parameter data from the set of possible implant parameter data according to the post-implant activities preference data.

2. A computer-implemented method as claimed in claim 1, wherein the implant parameter data relates to alignment information data for the alignment of an orthopaedic implant.

3. A computer-implemented method as claimed in claim 2, wherein the alignment information data comprises one or more of: location information data for the orthopaedic implant; and orientation information data for the orthopaedic implant.

4. A computer-implemented method as claimed in claim 2, wherein the alignment information data comprises actual 3D model data of the joint.

5. A computer-implemented method as claimed in claim 1, wherein the implant parameter data relates to modelling data of the alignment of an orthopaedic implant.

6. A computer-implemented method as claimed in claim 1, wherein the implant parameter data relates to a selection of an orthopaedic implant.

7. A computer-implemented method as claimed in claim 1, wherein the implant parameter data relates to manufacturing implant parameter data for manufacturing an orthopaedic implant.

8. A computer-implemented method as claimed in claim 1, wherein the implant parameter data relates to manufacturing parameters for manufacturing a patient specific jig.

9. A computer-implemented method as claimed in claim 1, wherein the patient specific information data comprises patient acquired data indicative of one or more desired post-implant activities.

10. A computer-implemented method as claimed in claim 9, wherein the one or more dynamic characteristics comprise a virtual prediction based on one or more of: joint kinematics data; joint loading data; and joint articulation behaviour data during desired post-implant activities.

11. A computer-implemented method as claimed in claim 10, wherein the virtual prediction comprises a computer model prediction.

12. A computer-implemented method as claimed in claim 1, wherein the patient specific information data is indicative of one or more static characteristics.

13. A computer-implemented method as claimed in claim 12, wherein the one or more static characteristics comprises one or more load bearing axes of a biomechanical reference frame.

14. A computer-implemented method as claimed in claim 13, wherein the one or more load bearing axes of the biomechanical reference frame comprises a primary load bearing axis.

15. A computer-implemented method as claimed in claim 12, wherein the one or more static characteristics comprise one or more load bearing axes of at least one reference frame of the group of biomechanical reference frames comprising: an acetabular reference frame, a femoral reference frame, a tibial reference frame, and a spinal reference frame.

16. A computer-implemented method as claimed in claim 1, wherein the patient specific information data comprises 2D imaging data.

17. A computer-implemented method as claimed in claim 16, wherein the 2D imaging data comprises one or more of: X-Ray data and visual fluoroscopy data.

18. A computer-implemented method as claimed in claim 1, wherein the patient specific information data comprises 3D imaging data.

19. A computer-implemented method as claimed in claim 18, wherein the 3D imaging data comprises one or more of: Magnetic Resonance Imaging (MRI) data, Computed Tomography (CT) data, ultrasound data, radiological data, and motion capture data.

20. A computer-implemented method as claimed in claim 1, wherein the patient specific information data comprises 4D imaging data.

21. A computer-implemented method as claimed in claim 20, wherein the 4D imaging data comprises motion capture data.

22. A computer-implemented method as claimed in claim 1, wherein the patient specific information data comprises 2D and 3D imaging data.

23. A computer-implemented method as claimed in claim 1, wherein the patient specific information data comprises data indicative of one or more physical characteristics of the patient.

24. A computer-implemented method as claimed in claim 23, wherein the one or more physical characteristics comprises one or more of: age data, gender data, height data, weight data, activity level data, BMI data, body condition data, and body shape data.

25. A computer-implemented method as claimed in claim 1, wherein the post-implant activities preference data is a preference ratio being indicative of comparative patient preference for the one or more desired post-implant activities.

26. A computer-implemented method as claimed in claim 1, the computer-implemented method further comprising the step of:

- accessing a database of library implant parameter data, wherein the implant parameter data is further selected according to the library parameter information data.

27. A computer-implemented method as claimed in claim 26, wherein the library implant parameter data comprises data relating to a group of available orthopaedic implants for performing at least one of the one or more desired post-implant activities.

28. A computer-implemented method as claimed in claim 26, wherein the library implant parameter data comprises data relating to a group of patients fitted with an orthopaedic implant for performing at least one of the one or more desired post-implant activities.

29. A method of controlling an alignment system to align an orthopaedic implant according to alignment information data generated by the computer-implemented method as claimed in any one of claims 1 to 28.

30. A method as claimed in claim 29, wherein the alignment system is selected from a group of alignment systems comprising: a robotic alignment system, a haptic feedback alignment system; and a computer-assisted alignment system.

31. A computer-implemented method for calculating implant design data for a group of orthopaedic implants, the computer-implemented method comprising the steps of:

- receiving patient library data;
- receiving implant range data; and
- calculating the implant design data for the group of orthopaedic implants according to the patient library data and the implant range data, wherein the patient library data comprises implant parameter data of multiple orthopaedic implants of multiple patients provided by the computer-implemented method as claimed in any one of claims 1 to 28.

32. A computer-implemented method as claimed in claim 31, wherein the implant range data is indicative of one or more subsets of the patient library data selected according to a user input request.

33. A computer-implemented method as claimed in claim 32, wherein at least one of the one or more subsets comprises patient satisfaction data relating to a number of satisfied patients selected from a group of patients fitted with an orthopaedic implant for performing one or more post-implant activities.

34. A computer-implemented method as claimed in claim 32, wherein at least one of the one or more subsets comprises implant activity data relating to a number of orthopaedic implants selected from a group of orthopaedic implants for performing one or more post-implant activities.

35. A computer-implemented method as claimed in claim 32, wherein at least one of the one or more subsets comprises implant size data relating to a number of orthopaedic implants of a particular size range selected from a group of orthopaedic implants for performing one or more post-implant activities.

36. A computer-implemented method as claimed in claim 31, wherein revised patient library data is calculated on the basis of filtering the patient library data according to the implant range data.

37. A computer-implemented method as claimed in claim 31, wherein the implant design data is calculated according to a statistical analysis of the revised patient library data.

38. A computer-implemented method as claimed in claim 37, wherein the statistical analysis is selected from a group of statistical analyses comprising: regression analysis and least squares analysis.

PCT/AU2012/000179
Received 04/09/2012

MARKED UP COPY

~~The claims defining the invention are as follows:~~

1. A computer-implemented method for providing implant parameter data~~alignment information data for the alignment of an orthopaedic implant for a joint of a patient~~, the computer-implemented method comprising the steps of:

   - being responsive to patient specific information data for deriving patient data, the patient specific information data being indicative of one or more dynamic characteristics;

   - determining a set of possible implant parameter data according to the patient data and patient acquired data, the patient acquired data being indicative of one or more desired post-implant activities, the patient acquired data comprising post-implant activities preference data;

   - selecting the implant parameter data from the set of possible implant parameter data according to the post-implant activities preference data.

2. A computer-implemented method as claimed in claim 1, wherein the implant parameter data relates to alignment information data for the alignment of an orthopaedic implant.

3. A computer-implemented method as claimed in claim 2, wherein the alignment information data comprises one or more of: location information data for the orthopaedic implant; and orientation information data for the orthopaedic implant.

4. A computer-implemented method as claimed in claim 2, wherein the alignment information data comprises actual 3D model data of the joint.

5. A computer-implemented method as claimed in claim 1, wherein the implant parameter data relates to modelling data of the alignment of an orthopaedic implant.

6. A computer-implemented method as claimed in claim 1, wherein the implant parameter data relates to a selection of an orthopaedic implant.

PCT/AU2012/000179
Received 04/09/2012

MARKED UP COPY

7. A computer-implemented method as claimed in claim 1, wherein the implant parameter data relates to manufacturing implant parameter data for manufacturing an orthopaedic implant.

8. A computer-implemented method as claimed in claim 1, wherein the implant parameter data relates to manufacturing parameters for manufacturing a patient specific jig.

~~and~~

~~being responsive to the patient data for providing the alignment information data for the alignment of the orthopaedic implant.~~

~~2. A computer implemented method as claimed in claim 1, wherein the alignment information data comprises actual 3D model data of the joint.~~

~~3. A computer implemented method as claimed in claim 1, wherein the alignment information data comprises one or more of: location information data for the orthopaedic implant; and orientation information data for the orthopaedic implant.~~

~~4.~~9. A computer-implemented method as claimed in claim 1, wherein the patient specific information data comprises patient acquired data indicative of one or more desired post-implant activities.

~~5.~~10. A computer-implemented method as claimed in claim 49, wherein the one or more dynamic characteristics comprise a virtual prediction based on one or more of: joint kinematics data; joint loading data; and joint articulation behaviour data during desired post-implant activities.

~~6.~~11. A computer-implemented method as claimed in claim ~~5~~10, wherein the virtual prediction comprises a computer model prediction.

~~7.~~12. A computer-implemented method as claimed in claim 1, wherein the patient specific information data is indicative of one or more static characteristics.

~~8.~~13. A computer-implemented method as claimed in claim ~~7~~12, wherein the one or more static characteristics comprises one or more load bearing axes of a biomechanical reference frame.

PCT/AU2012/000179
Received 04/09/2012

MARKED UP COPY

~~9.~~14. A computer-implemented method as claimed in claim ~~8~~13, wherein the one or more load bearing axes of the biomechanical reference frame comprises a primary load bearing axis.

~~10.~~15. A computer-implemented method as claimed in claim ~~7~~12, wherein the one or more static characteristics comprise one or more load bearing axes of at least one reference frame of the group of biomechanical reference frames comprising: an acetabular reference frame, a femoral reference frame, a tibial reference frame, and a spinal reference frame.

~~11.~~16. A computer-implemented method as claimed in claim 1, wherein the patient specific information data comprises 2D imaging data.

~~12.~~17. A computer-implemented method as claimed in claim ~~11~~16, wherein the 2D imaging data comprises one or more of: X-Ray data and visual fluoroscopy data.

~~13.~~18. A computer-implemented method as claimed in claim 1, wherein the patient specific information data comprises 3D imaging data.

~~14.~~19. A computer-implemented method as claimed in claim ~~13~~18, wherein the 3D imaging data comprises one or more of: Magnetic Resonance Imaging (MRI) data, Computed Tomography (CT) data, ultrasound data, radiological data, and motion capture data.

~~15.~~20. A computer-implemented method as claimed in claim 1, wherein the patient specific information data comprises 4D imaging data.

~~16.~~21. A computer-implemented method as claimed in claim ~~15~~20, wherein the 4D imaging data comprises motion capture data.

~~17.~~22. A computer-implemented method as claimed in claim 1, wherein the patient specific information data comprises 2D and 3D imaging data.

~~18.~~23. A computer-implemented method as claimed in claim 1, wherein the patient specific information data comprises data indicative of one or more physical characteristics of the patient.

PCT/AU2012/000179
Received 04/09/2012

MARKED UP COPY

~~19.~~24. A computer-implemented method as claimed in claim ~~18~~23, wherein the one or more physical characteristics comprises one or more of: age data, gender data, height data, weight data, activity level data, BMI data, body condition data, and body shape data.

~~20. A computer-implemented method as claimed in claim 1, the computer-implemented method further comprising the steps of:~~

- ~~determining a set of possible alignment information data according to the patient data and patient acquired data, the patient acquired data being indicative of one or more desired post-implant activities, the patient acquired data comprising post-implant activities preference data; and~~

- ~~selecting the alignment information data from the set of possible alignment information data according to the post-implant activities preference data.~~

~~21.~~25. A computer-implemented method as claimed in claim ~~20~~1, wherein the post-implant activities preference data is a preference ratio being indicative of comparative patient preference for the one or more desired post-implant activities.

~~22.~~26. A computer-implemented method as claimed in claim ~~20~~1, the computer-implemented method further comprising the step of:

- accessing a database of library implant parameter data~~alignment information data~~, wherein the implant parameter data~~alignment information data~~ is further selected according to the library ~~alignment~~ parameter information data.

~~23.~~27. A computer-implemented method as claimed in claim ~~22~~26, wherein the library implant parameter data~~alignment information data~~ comprises data relating to a group of available orthopaedic implants for performing at least one of the one or more desired post-implant activities.

~~24.~~28. A computer-implemented method as claimed in claim ~~22~~26, wherein the library implant parameter data~~alignment information data~~ comprises data relating to a group of patients fitted with an orthopaedic implant for performing at least one of the one or more desired post-implant activities.

PCT/AU2012/000179
Received 04/09/2012

MARKED UP COPY

~~25.~~29. A method of controlling an alignment system to align an orthopaedic implant according to alignment information data generated by the computer-implemented method as claimed in any one of claims 1 to ~~24~~28.

30. A method as claimed in claim ~~25~~29, wherein the alignment system is selected from a group of alignment systems comprising: a robotic alignment system, a haptic feedback alignment system; and a computer-assisted alignment system.

PCT/AU2012/000179
Received 04/09/2012

MARKED UP COPY

~~26.~~

~~27. A computing device for providing alignment information data for the alignment of an orthopaedic implant for a joint of a patient, the computing device comprising:~~

- ~~a processor for processing digital data;~~
- ~~a memory device for storing digital data including computer program code and being coupled to the processor via a bus; and~~
- ~~a data interface for sending and receiving digital data and being coupled to the processor via the bus, wherein the processor is controlled by the computer program code to:~~
  - ~~receive, via the data interface, patient-specific information data being indicative of one or more dynamic characteristics;~~
  - ~~calculate patient data according to the patient specific information data; and~~
  - ~~calculate the alignment information data for the orthopaedic implant according to the patient data.~~

~~28. A computing device as claimed in claim 27, wherein the alignment information data comprises actual 3D model data of the joint.~~

~~29. A computing device as claimed in claim 27, wherein the alignment information data comprises one or more of: location information data for the orthopaedic implant; and orientation information data for the orthopaedic implant.~~

~~30. A computing device as claimed in claim 27, wherein the patient specific information data comprises patient acquired data indicative of one or more desired post implant activities.~~

~~31. A computing device as claimed in claim 27, wherein the one or more dynamic characteristics comprises a virtual prediction based on one or more of: joint kinematics data; joint loading data; and joint articulation behaviour data during desired post implant activities.~~

PCT/AU2012/000179
Received 04/09/2012

~~32. A computing device as claimed in claim 31, wherein the virtual prediction comprises a computer model prediction.~~

~~33. A computing device as claimed in claim 27, wherein the patient specific information data is indicative of one or more static characteristics.~~

~~34. A computing device as claimed in claim 33, wherein the one or more static characteristics comprise one or more load bearing axes of a biomechanical reference frame.~~

~~35. A computing device as claimed in claim 34, wherein the one or more load bearing axes of the biomechanical reference frame comprises a primary load bearing axis.~~

~~36. A computing device as claimed in claim 33, wherein the one or more static characteristics comprise one or more load bearing axes of at least one reference frame of a biomechanical reference frame comprising: an acetabular reference frame, a femoral reference frame, a tibial reference frame, and a spinal reference frame.~~

~~37. A computing device as claimed in claim 27, wherein the patient specific information data comprises 2D imaging data.~~

~~38. A computing device as claimed in claim 37, wherein the 2D imaging data comprises one or more of: X-Ray data and visual fluoroscopy data.~~

~~39. A computing device as claimed in claim 27, wherein the patient specific information data comprises 3D imaging data.~~

~~40. A computing device as claimed in claim 39, wherein the 3D imaging data comprises one or more of: Magnetic Resonance Imaging (MRI) data, Computed Tomography (CT) data, ultrasound data, radiological data, and motion capture data.~~

~~41. A computing device as claimed in claim 27, wherein the patient specific information data comprises 4D imaging data.~~

~~42. A computing device as claimed in claim 41 wherein the 4D imaging data comprises motion capture data.~~

PCT/AU2012/000179
Received 04/09/2012

~~43. A computing device as claimed in claim 27, wherein the patient specific information data comprises 2D and 3D imaging data.~~

~~44. A computing device as claimed in claim 27, wherein the patient specific information data comprises data indicative of one or more physical characteristics of the patient.~~

~~45. A computing device as claimed in claim 44, wherein the one or more physical characteristics comprises one or more of: age data, gender data, height data, weight data, activity level data, BMI data, body condition data, and body shape data.~~

~~46. A computing device as claimed in claim 27, wherein the processor is further controlled by the computer program code to:~~

- ~~receive, via the data interface, patient acquired data being indicative of one or more desired post-implant activities, the patient acquired data comprising post-implant activities preference data;~~
- ~~calculate a set of possible alignment information data according to the patient data and the patient acquired data; and~~
- ~~select the alignment information data from the set of possible alignment information data according to the post-implant activities preference data.~~

~~47. A computing device as claimed in claim 46, wherein the post-implant activities preference data is a preference ratio being indicative of comparative patient preference for the one or more desired post-implant activities.~~

~~48. A computing device as claimed in claim 46, further comprising a database for storing digital data including library alignment information data, the database being coupled to the processor, wherein the processor is further controlled by the computer program code to:~~

- ~~load, from the database, the library alignment information data, wherein the alignment information data is further selected according to the library alignment information data.~~

PCT/AU2012/000179
Received 04/09/2012

~~49. A computing device as claimed in claim 48, wherein the library alignment information data comprises data relating to a group of available orthopaedic implants for performing at least one of the one or more desired post implant activities.~~

~~50. A computing device as claimed in claim 48, wherein the library alignment information data comprises data relating to a group of patients fitted with an orthopaedic implant for performing at least one of the one or more desired post-implant activities.~~

~~51. A computer readable storage medium comprising computer program code instructions, being executable by a computer, for:~~

- ~~receiving, via a data interface, patient specific information data indicative of one or more dynamic characteristics;~~
- ~~calculating patient data according to the patient specific information data; and~~
- ~~calculating alignment information data for an orthopaedic implant according to the patient data.~~

~~52. A computer readable storage medium as claimed in claim 51, wherein the alignment information data comprises actual 3D model data of the joint.~~

~~53. A computer readable storage medium as claimed in claim 51, wherein the alignment information data comprises one or more of: location information data for the orthopaedic implant; and orientation information data for the orthopaedic implant.~~

~~54. A computer readable storage medium as claimed in claim 51, wherein the patient specific information data comprises patient acquired data indicative of one or more desired post implant activities.~~

~~55. A computer readable storage medium as claimed in claim 51, wherein the one or more dynamic characteristics comprise a virtual prediction based on one or more of: joint kinematics data; joint loading data; and joint articulation behaviour data during desired post implant activities.~~

~~56. A computer readable storage medium as claimed in claim 55, wherein the virtual prediction comprises a computer model prediction.~~

PCT/AU2012/000179
Received 04/09/2012

MARKED UP COPY

~~57. A computer readable storage medium as claimed in claim 51, wherein the patient specific information data is indicative of one or more static characteristics.~~

~~58. A computer readable storage medium as claimed in claim 57, wherein the one or more static characteristics comprise one or more load bearing axes of a biomechanical reference frame.~~

~~59. A computer readable storage medium as claimed in claim 58, wherein the one or more load bearing axes of the biomechanical reference frame comprises a primary load bearing axis.~~

~~60. A computer readable storage medium as claimed in claim 57, wherein the one or more static characteristics comprise one or more load bearing axes of at least one reference frame of a biomechanical reference frame comprising: an acetabular reference frame, a femoral reference frame, a tibial reference frame, and a spinal reference frame.~~

~~61. A computer readable storage medium as claimed in claim 51, wherein the patient specific information data comprises 2D imaging data.~~

~~62. A computer readable storage medium as claimed in claim 61, wherein the 2D imaging data comprises one or more of: X-Ray data and visual fluoroscopy data.~~

~~63. A computer readable storage medium as claimed in claim 51, wherein the patient specific information data comprises 3D imaging data.~~

~~64. A computer readable storage medium as claimed in claim 63, wherein the 3D imaging data comprises one or more of: Magnetic Resonance Imaging (MRI) data, Computed Tomography (CT) data, ultrasound data, radiological data, and motion capture data.~~

~~65. A computer readable storage medium as claimed in claim 51, wherein the patient specific information data comprises 4D imaging data.~~

~~66. A computer readable storage medium as claimed in claim 65, wherein the 4D imaging data comprises motion capture data.~~

~~67. A computer readable storage medium as claimed in claim 51, wherein the patient specific information data comprises 2D and 3D imaging data.~~

PCT/AU2012/000179
Received 04/09/2012

~~68. A computer readable storage medium as claimed in claim 51, wherein the patient specific information data comprises data indicative of one or more physical characteristics of the patient.~~

~~69. A computer readable storage medium as claimed in claim 68, wherein the one or more physical characteristics comprises one or more of: age data, gender data, height data, weight data, activity level data, BMI data, body condition data, and body shape data.~~

~~70. A computer readable storage medium as claimed in claim 51, further comprising instructions for:~~

- ~~receiving, via a data interface, patient acquired data being indicative of one or more desired post implant activities, the patient acquired data comprising post implant activities preference data;~~
- ~~calculating a set of possible alignment information data according to the patient data and the patient acquired data; and~~
- ~~selecting the alignment information data from the set of possible alignment information data according to the post implant activities preference data.~~

~~71. A computer readable storage medium as claimed in claim 70, wherein the post implant activities preference data is a preference ratio being indicative of comparative patient preference for the one or more desired post implant activities.~~

~~72. A computer readable storage medium as claimed in claim 70, further comprising instructions for:~~

- ~~loading, from a database, library alignment information data, wherein the alignment information data is further selected according to the library alignment information data.~~

~~73. A computer readable storage medium as claimed in claim 72, wherein the library alignment information data comprises data relating to a group of available orthopaedic implants for performing at least one of the one or more desired post implant activities.~~

PCT/AU2012/000179
Received 04/09/2012

~~74. A computer readable storage medium as claimed in claim 72, wherein the library alignment information data comprises data relating to a group of patients fitted with an orthopaedic implant for performing at least one of the one or more desired post-implant activities.~~

~~75. A client computing device comprising an interface for sending and receiving digital data and being coupled, across a data link, to a computing device as claimed in any one of claims 27 to 50, wherein the interface is adapted for sending and receiving digital data as referred to in any one of claims 27 to 50.~~

~~76. A computer implemented method for selecting an orthopaedic implant for a joint of a patient from a group of available orthopaedic implants, the computer implemented method comprising the steps of:~~

~~— obtaining alignment information data for a patient according to the computer-implemented method as claimed in any one of claims 1 to 24; and~~

~~— being responsive to the alignment information data for selecting the orthopaedic implant from the group of available orthopaedic implants.~~

~~77. A computer implemented method as claimed in claim 76, the computer implemented method further comprising the step of:~~

~~— being responsive to the selected orthopaedic implant for updating a library alignment information database with the alignment information data.~~

~~78. A computing device for selecting an orthopaedic implant for a joint of a patient from a group of available orthopaedic implants, the computing device comprising:~~

~~— a processor for processing digital data;~~

~~— a memory device for storing digital data including computer program code and being coupled to the processor via a bus; and~~

~~— a data interface for sending and receiving digital data and being coupled to the processor via the bus, wherein the processor is controlled by the computer program code to:~~

PCT/AU2012/000179
Received 04/09/2012

~~— receive alignment information data for a patient according to the computer-implemented method as claimed in any one of claims 1 to 24; and~~

~~— select the orthopaedic implant from the group of available orthopaedic implants according to the alignment information data.~~

~~79. A computing device as claimed in claim 78, further comprising a database for storing digital data including alignment information data, the database being coupled to the processor, wherein the processor is further controlled by the computer program code to:~~

~~— update the database with the alignment information data according to the selected orthopaedic implant.~~

~~80. A computer readable storage medium comprising computer program code instructions, being executable by a computer, for:~~

~~— receiving alignment information data for a patient according to the computer-implemented method as claimed in any one of claims 1 to 24; and~~

~~— selecting an orthopaedic implant from a group of available orthopaedic implants according to the alignment information data.~~

~~81. A computer readable storage medium as claimed in claim 80, further comprising instructions for:~~

~~— updating a database with the alignment information data according to the selected orthopaedic implant.~~

~~82. A client computing device comprising an interface for sending and receiving digital data and being coupled, across a data link, to a computing device as claimed in any one of claims 78 to 79, wherein the interface is adapted for sending and receiving digital data as referred to in any one of claims 78 to 79.~~

~~83. A computer implemented method for aligning an orthopaedic implant for a joint of a patient, the computer-implemented method comprising the steps of:~~

PCT/AU2012/000179
Received 04/09/2012

~~obtaining alignment information data according to the computer implemented method as claimed in any one of claims 1 to 24; and~~

~~being responsive to the alignment information data, causing the orthopaedic implant to be aligned relative to the joint of the patient.~~

~~84. A computer implemented method as claimed in claim 83, wherein the orthopaedic implant is aligned by an alignment system that receives the alignment information data.~~

~~85. A computer implemented method as claimed in claim 84, wherein the alignment system is selected from a group of alignment systems comprising: a robotic alignment system, a haptic feedback alignment system, and a computer assisted alignment system.~~

~~86. A computer implemented method as claimed in claim 83, the computer implemented method further comprising the step of:~~

~~being responsive to the aligned orthopaedic implant for updating a library alignment information database with the alignment information data.~~

~~87. A computing device for aligning an orthopaedic implant for a joint of a patient, the computing device comprising:~~

~~a processor for processing digital data;~~

~~a memory device for storing digital data including computer program code and being coupled to the processor via a bus; and~~

~~a data interface for sending and receiving digital data and being coupled to the processor via the bus, wherein the processor is controlled by the computer program code to:~~

~~receive, via the data interface, alignment information data for a patient according to the computer implemented method as claimed in any one of claims 1 to 24; and~~

PCT/AU2012/000179
Received 04/09/2012

~~— send, via the data interface, the alignment information data to an alignment system for aligning the orthopaedic implant relative to the joint of the patient~~

~~88. A computing device as claimed in claim 87, wherein the alignment system is selected from a group of alignment systems comprising: a robotic alignment system, a haptic feedback alignment system; and a computer assisted alignment system.~~

~~89. A computing device as claimed in claim 87, further comprising a database for storing digital data including alignment information data, the database being coupled to the processor, wherein the processor is further controlled by the computer program code to:~~

~~— update the database with the alignment information data according to the aligned orthopaedic implant.~~

~~90. A computer readable storage medium comprising computer program code instructions, being executable by a computer, for:~~

~~— receiving, via a data interface, alignment information data for a patient according to the computer implemented method as claimed in any one of claims 1 to 24; and~~

~~— sending, via the data interface, the alignment information data to an alignment system for aligning the orthopaedic implant relative to the joint of the patient.~~

~~91. A computer readable storage medium as claimed in claim 90, wherein the alignment system is selected from a group of alignment systems comprising: a robotic alignment system, a haptic feedback alignment system, and a computer assisted alignment system.~~

~~92. A computer readable storage medium as claimed in claim 90, further comprising instructions for:~~

~~— updating a database with the alignment information data according to the aligned orthopaedic implant.~~

PCT/AU2012/000179
Received 04/09/2012

MARKED UP COPY

~~93. A client computing device comprising an interface for sending and receiving digital data and being coupled, across a data link, to a computing device as claimed in any one of claims 87 to 89, wherein the interface is adapted for sending and receiving digital data as referred to in any one of claims 87 to 89.~~

~~94. A computer implemented method for modelling the alignment of an orthopaedic implant for a joint of a patient, the computer implemented method comprising the steps of:~~

~~— being responsive to patient specific information data for deriving patient data, the patient specific information data being indicative of one or more dynamic characteristics; and~~

~~— being responsive to the patient data for providing 3D model data of the joint, such that the 3D model data shows the orthopaedic implant in an alignment configuration based on the patient specific information data.~~

~~95. A computer implemented method as claimed in claim 94, wherein the one or more dynamic characteristics comprise a virtual prediction based on one or more of: joint kinematics data; joint loading data; and joint articulation behaviour data during desired post implant activities.~~

~~96. A computer implemented method as claimed in claim 95, wherein the virtual prediction comprises a computer model prediction.~~

~~97. A computer implemented method as claimed in claim 94, wherein the patient specific information data is indicative of one or more static characteristics.~~

~~98. A computer implemented method as claimed in claim 97, wherein the one or more static characteristics comprises one or more load bearing axes of a biomechanical reference frame.~~

~~99. A computer implemented method as claimed in claim 98, wherein the one or more load bearing axes of the biomechanical reference frame comprises a primary load bearing axis.~~

PCT/AU2012/000179
Received 04/09/2012

~~100. A computer implemented method as claimed in claim 97, wherein the one or more static characteristics comprise one or more load bearing axes of at least one reference frame of the group of biomechanical reference frames comprising: an acetabular reference frame, a femoral reference frame, a tibial reference frame, and a spinal reference frame.~~

~~101. A computer implemented method as claimed in claim 94, wherein the patient specific information data comprises 2D imaging data.~~

~~102. A computer implemented method as claimed in claim 101, wherein the 2D imaging data comprises one or more of: X Ray data and visual fluoroscopy data.~~

~~103. A computer implemented method as claimed in claim 94, wherein the patient specific information data comprises 3D imaging data.~~

~~104. A computer implemented method as claimed in claim 103, wherein the 3D imaging data comprises one or more of: Magnetic Resonance Imaging (MRI) data, Computed Tomography (CT) data, ultrasound data, radiological data, and motion capture data.~~

~~105. A computer implemented method as claimed in claim 94, wherein the patient specific information data comprises 4D imaging data.~~

~~106. A computer implemented method as claimed in claim 105, wherein the 4D imaging data comprises motion capture data.~~

~~107. A computer implemented method as claimed in claim 94, wherein the patient specific information data comprises 2D and 3D imaging data.~~

~~108. A computer implemented method as claimed in claim 94, wherein the patient specific information data comprises data being indicative of one or more physical characteristics of the patient.~~

~~109. A computer implemented method as claimed in claim 108, wherein the one or more physical characteristics comprises one or more of: age data, gender data, height data, weight data, activity level data, BMI data, body condition data, and body shape data.~~

PCT/AU2012/000179
Received 04/09/2012

~~110. A computer implemented method as claimed in claim 94, the computer-implemented method further comprising the steps of:~~

~~determining a set of possible alignment configurations according to the patient data and patient acquired data, the patient acquired data being indicative of one or more desired post-implant activities, the patient acquired data comprising post-implant activities preference data; and~~

~~selecting an alignment configuration from the set of possible alignment configurations according to the post-implant activities preference data.~~

~~111. A computer implemented method as claimed in claim 110, wherein the post-implant activities preference data is a preference ratio being indicative of comparative patient preference for the one or more desired post-implant activities.~~

~~112. A computer-implemented method as claimed in claim 110, the computer-implemented method further comprising the step of:~~

~~accessing a database of library alignment configuration data, wherein the alignment configuration is further selected according to the library alignment configuration data.~~

~~113. A computer-implemented method as claimed in claim 112, wherein the library alignment configuration data comprises data relating to a group of available orthopaedic implants for performing at least one of the one or more desired post-implant activities.~~

~~114. A computer-implemented method as claimed in claim 112, wherein the library alignment configuration data comprises data relating to a group of patients fitted with an orthopaedic implant for performing at least one of the one or more desired post-implant activities.~~

~~115. A computing device for modelling the alignment of an orthopaedic implant for a joint of a patient, the computing device comprising:~~

~~a processor for processing digital data;~~

PCT/AU2012/000179
Received 04/09/2012

~~a memory device for storing digital data including computer program code and being coupled to the processor via a bus; and~~

~~a data interface for sending and receiving digital data and being coupled to the processor via the bus, wherein the processor is controlled by the computer program code to:~~

~~receive, via the data interface, patient specific information data for deriving patient data, the patient specific information data being indicative of one or more dynamic characteristics;~~

~~calculate patient data according to the patient specific information data; and~~

~~calculate 3D model data of the joint according to the patient data, such that the 3D model data shows the orthopaedic implant in an alignment configuration.~~

~~116. A computing device as claimed in claim 115, wherein the one or more dynamic characteristics comprise a virtual prediction based on one or more of: joint kinematics data; joint loading data; and joint articulation behaviour data during desired post-implant activities.~~

~~117. A computing device as claimed in claim 116, wherein the virtual prediction comprises a computer model prediction.~~

~~118. A computing device as claimed in claim 115, wherein the patient specific information data is indicative of one or more static characteristics.~~

~~119. A computing device as claimed in claim 118, wherein the one or more static characteristics comprises one or more load bearing axes of a biomechanical reference frame.~~

~~120. A computing device as claimed in claim 119, wherein the one or more load bearing axes of the biomechanical reference frame comprises a primary load bearing axis.~~

PCT/AU2012/000179
Received 04/09/2012

~~121. A computing device as claimed in claim 118, wherein the one or more static characteristics comprise one or more load bearing axes of at least one reference frame of the group of biomechanical reference frames comprising: an acetabular reference frame, a femoral reference frame, a tibial reference frame, and a spinal reference frame.~~

~~122. A computing device as claimed in claim 115, wherein the patient specific information data comprises 2D imaging data.~~

~~123. A computing device as claimed in claim 122, wherein the 2D imaging data comprises one or more of: X-Ray data and visual fluoroscopy data.~~

~~124. A computing device as claimed in claim 115, wherein the patient specific information data comprises 3D imaging data.~~

~~125. A computing device as claimed in claim 124, wherein the 3D imaging data comprises one or more of: Magnetic Resonance Imaging (MRI) data, Computed Tomography (CT) data, ultrasound data, radiological data, and motion capture data.~~

~~126. A computing device as claimed in claim 115, wherein the patient specific information data comprises 4D imaging data.~~

~~127. A computing device as claimed in claim 126, wherein the 4D imaging data comprises motion capture data.~~

~~128. A computing device as claimed in claim 115, wherein the patient specific information data comprises 2D and 3D imaging data.~~

~~129. A computing device as claimed in claim 115, wherein the patient specific information data comprises data being indicative of one or more physical characteristics of the patient.~~

~~130. A computing device as claimed in claim 129, wherein the one or more physical characteristics comprises one or more of: age data, gender data, height data, weight data, activity level data, BMI data, body condition data, and body shape data.~~

~~131. A computing device as claimed in claim 115, wherein the processor is further controlled by the computer program code to:~~

PCT/AU2012/000179
Received 04/09/2012

~~receive, via the data interface, patient acquired data being indicative of one or more desired post-implant activities, the patient acquired data comprising post-implant activities preference data;~~

~~calculate a set of possible alignment configurations according to the patient data and the patient acquired data; and~~

~~select an alignment configuration from the set of possible alignment configurations according to the post-implant activities preference data.~~

~~132. A computing device as claimed in claim 131, wherein the post-implant activities preference data is a preference ratio being indicative of comparative patient preference for the one or more desired post-implant activities.~~

~~133. A computing device as claimed in claim 131, further comprising a database for storing digital data including library alignment configuration data, the database being coupled to the processor, wherein the processor is further controlled by the computer program code to:~~

~~load from the database, the library alignment configuration data, wherein the alignment configuration is further selected according to the library alignment configuration data.~~

~~134. A computing device as claimed in claim 133, wherein the library alignment configuration data comprises data relating to a group of available orthopaedic implants for performing at least one of the one or more desired post-implant activities.~~

~~135. A computing device as claimed in claim 133, wherein the library alignment configuration data comprises data relating to a group of patients fitted with an orthopaedic implant for performing at least one of the one or more desired post-implant activities.~~

~~136. A computer readable storage medium comprising computer program code instructions, being executable by a computer, for:~~

PCT/AU2012/000179
Received 04/09/2012

~~— receiving, via a data interface, patient specific information data for deriving patient data, the patient specific information being indicative of one or more dynamic characteristics;~~

~~— calculating patient data according to the patient specific information data; and~~

~~— calculating 3D model data of a joint according to the patient data, such that the 3D model data shows an orthopaedic implant in an alignment configuration.~~

~~137. A computer readable storage medium as claimed in claim 136, wherein the one or more dynamic characteristics comprise a virtual prediction based on one or more of: joint kinematics data; joint loading data; and joint articulation behaviour data during desired post-implant activities.~~

~~138. A computer readable storage medium as claimed in claim 137, wherein the virtual prediction comprises a computer model prediction.~~

~~139. A computer readable storage medium as claimed in claim 136, wherein the patient specific information data is indicative of one or more static characteristics.~~

~~140. A computer readable storage medium as claimed in claim 139, wherein the one or more static characteristics comprises one or more load bearing axes of a biomechanical reference frame.~~

~~141. A computer readable storage medium as claimed in claim 140, wherein the one or more load bearing axes of the biomechanical reference frame comprises a primary load bearing axis.~~

~~142. A computer readable storage medium as claimed in claim 139, wherein the one or more static characteristics comprise one or more load bearing axes of at least one reference frame of the group of biomechanical reference frames comprising: an acetabular reference frame, a femoral reference frame, a tibial reference frame, and a spinal reference frame.~~

~~143. A computer readable storage medium as claimed in claim 136, wherein the patient specific information data comprises 2D imaging data.~~

PCT/AU2012/000179
Received 04/09/2012

~~144. A computer readable storage medium as claimed in claim 143, wherein the 2D imaging data comprises one or more of: X-Ray data and visual fluoroscopy data.~~

~~145. A computer readable storage medium as claimed in claim 136, wherein the patient specific information data comprises 3D imaging data.~~

~~146. A computer readable storage medium as claimed in claim 145, wherein the 3D imaging data comprises one or more of: Magnetic Resonance Imaging (MRI) data, Computed Tomography (CT) data, ultrasound data, radiological data, and motion capture data.~~

~~147. A computer readable storage medium as claimed in claim 136, wherein the patient specific information data comprises 4D imaging data.~~

~~148. A computer readable storage medium as claimed in claim 147, wherein the 4D imaging data comprises motion capture data.~~

~~149. A computer readable storage medium as claimed in claim 136, wherein the patient specific information data comprises 2D and 3D imaging data.~~

~~150. A computer readable storage medium as claimed in claim 136, wherein the patient specific information data comprises data indicative of one or more physical characteristics of the patient.~~

~~151. A computer readable storage medium as claimed in claim 150, wherein the one or more physical characteristics comprises one or more of: age data, gender data, height data, weight data, activity level data, BMI data, body condition data, and body shape data.~~

~~152. A computer readable storage medium as claimed in claim 136, further comprising instructions for:~~

- ~~receiving, via the data interface, patient acquired data being indicative of one or more desired post implant activities, the patient acquired data comprising post implant activities preference data;~~

- ~~calculating a set of possible alignment configurations according to the patient data and the patient acquired data; and~~

PCT/AU2012/000179
Received 04/09/2012

~~selecting an alignment configuration from the set of possible alignment configurations according to the post-implant activities preference data.~~

~~153. A computer readable storage medium as claimed in claim 152, wherein the post-implant activities preference data is a preference ratio being indicative of comparative patient preference for the one or more desired post-implant activities.~~

~~154. A computer readable storage medium as claimed in claim 152, further comprising instruction for:~~

~~loading from a database, library alignment configuration data, wherein the alignment configuration is further selected according to the library alignment configuration data.~~

~~155. A computer readable storage medium as claimed in claim 154, wherein the library alignment configuration data comprises data relating to a group of available orthopaedic implants for performing at least one of the one or more desired post-implant activities.~~

~~156. A computer readable storage medium as claimed in claim 154, wherein the library alignment configuration data comprises data relating to a group of patients fitted with an orthopaedic implant for performing at least one of the one or more desired post-implant activities.~~

~~157. A client computing device comprising an interface for sending and receiving digital data and being coupled, across a data link, to a computing device as claimed in any one of claims 115 to 135, wherein the interface is adapted for sending and receiving digital data as referred to in any one of claims 115 to 135.~~

~~158. A computer implemented method for selecting an orthopaedic implant for a joint of a patient from a group of orthopaedic implants, the computer implemented method comprising the steps of:~~

~~being responsive to patient specific information data for deriving patient data, the patient specific information data being indicative of one or more dynamic characteristics;~~

PCT/AU2012/000179
Received 04/09/2012

~~being responsive to the patient data for providing actual 3D model data;~~

~~being responsive to the patient data for providing preferred 3D model data of the joint; and~~

~~using the actual 3D model data and the preferred 3D model data to select the orthopaedic implant from the group of orthopaedic implants.~~

~~159. A computer-implemented method as claimed in claim 158, the computer-implemented method further comprising the steps of:~~

~~receiving patient acquired data, the patient acquired data being indicative of one or more desired post implant activities, the patient acquired data comprising post-implant activities preference data; and~~

~~being responsive to the post implant activities preference data for further optimizing the preferred 3D model data of the joint.~~

~~160. A computer implemented method as claimed in claim 159, wherein the post-implant activities preference data is a preference ratio being indicative of comparative patient preference for the one or more desired post implant activities.~~

~~161. A computer-implemented method as claimed in claim 158159, the computer-implemented method further comprising the step of:~~

~~accessing a database of library alignment configuration data, wherein the preferred 3D model data of the joint is further provided based on an optimization of the actual 3D model data according to the library alignment configuration data.~~

~~162. A computer implemented method as claimed in claim 161, wherein the library alignment configuration data comprises data relating to a group of available orthopaedic implants for performing at least one of the one or more desired post-implant activities.~~

~~163. A computer-implemented method as claimed in claim 161, wherein the library alignment configuration data comprises data relating to a group of patients fitted with~~

PCT/AU2012/000179
Received 04/09/2012

~~an orthopaedic implant for performing at least one of the one or more desired post-implant activities.~~

~~164. A computer implemented method as claimed in claim 158, the computer-implemented method further comprising the step of:~~

~~displaying a graphical user interface comprising at least the preferred 3D model data of the joint.~~

~~165. A computing device for selecting an orthopaedic implant for a joint of a patient from a group of orthopaedic implants, the computing device comprising:~~

~~a processor for processing digital data;~~

~~a memory device for storing digital data including computer program code and being coupled to the processor via a bus; and~~

~~a data interface for sending and receiving digital data and being coupled to the processor via the bus, wherein the processor is controlled by the computer program code to:~~

~~receive, via the data interface, patient specific information data for deriving patient data, the patient specific information data being indicative of one or more dynamic characteristics;~~

~~calculate actual 3D model data of the joint according to the patient data;~~

~~calculate preferred 3D model data of the joint according to the patient data; and~~

~~select the orthopaedic implant from the group of orthopaedic implants according to the actual 3D model data and the preferred 3D model data.~~

~~166. A computing device as claimed in claim 165, the processor is controlled by the computer program code to:~~

PCT/AU2012/000179
Received 04/09/2012

~~receive, via the data interface, patient acquired data, the patient acquired data being indicative of one or more desired post-implant activities, the patient acquired data comprising post-implant activities preference data; and~~

~~calculate the preferred 3D model data of the joint according to the post-implant activities preference data.~~

~~167. A computing device as claimed in claim 166, wherein the post-implant activities preference data is a preference ratio being indicative of comparative patient preference for the one or more desired post-implant activities.~~

~~168. A computing device as claimed in claim 165, further comprising a database for storing digital data including library alignment configuration data, the database being coupled to the processor, wherein the processor is further controlled by the computer program code to:~~

~~load from the database, the library alignment configuration data, wherein the preferred 3D model of the joint is further calculated based on an optimization of the actual 3D model data according to the library alignment configuration data.~~

~~169. A computing device as claimed in claim 168, wherein the library alignment configuration data comprises data relating to a group of available orthopaedic implants for performing at least one of the one or more desired post-implant activities.~~

~~170. A computing device as claimed in claim 168, wherein the library alignment configuration data comprises data relating to a group of patients fitted with an orthopaedic implant for performing at least one of the one or more desired post-implant activities.~~

~~171. A computing device as claimed in claim 165, further comprising a display device coupled to the processor, wherein the display device is controlled by the computer program code to display a graphical user interface comprising at least the preferred 3D model data of the joint; the data interface being controlled by the computer program code to receive at least the preferred 3D model data of the joint.~~

PCT/AU2012/000179
Received 04/09/2012

~~172. A computer readable storage medium comprising computer program code instructions, being executable by a computer, for:~~

- ~~receiving, via a data interface, patient specific information data for deriving patient data, the patient specific information data being indicative of one or more dynamic characteristics;~~
- ~~calculating actual 3D model data of the joint according to the patient data;~~
- ~~calculating preferred 3D model data of the joint according to the patient data; and~~
- ~~selecting the orthopaedic implant from a group of implants according to the actual 3D model data and the preferred 3D model data.~~

~~173. A computer readable storage medium as claimed in claim 172, further comprising instructions for~~

- ~~receiving, via the data interface, patient acquired data, the patient acquired data being indicative of one or more desired post implant activities, the patient acquired data comprising post implant activities preference data; and~~
- ~~calculating the preferred 3D model data of the joint according to the post-implant activities preference data.~~

~~174. A computer readable storage medium as claimed in claim 173, wherein the post implant activities preference data is a preference ratio being indicative of comparative patient preference for the one or more desired post implant activities.~~

~~175. A computer readable storage medium as claimed in claim 173, further comprising instruction for:~~

- ~~loading from a database, library alignment configuration data, wherein the preferred 3D model data of the joint is further calculated based on an optimization of the actual 3D model data according to the library alignment configuration data.~~

PCT/AU2012/000179
Received 04/09/2012

~~176. A computer readable storage medium as claimed in claim 175, wherein the library alignment configuration data comprises data relating to a group of available orthopaedic implants for performing at least one of the one or more desired post-implant activities.~~

~~177. A computer readable storage medium as claimed in claim 175, wherein the library alignment configuration data comprises data relating to a group of patients fitted with an orthopaedic implant for performing at least one of the one or more desired post-implant activities.~~

~~178. A computer readable storage medium as claimed in claim 172, further comprising instruction for:~~

~~displaying a graphical user interface comprising at least the preferred 3D model data of the joint.~~

~~179. A client computing device comprising an interface for sending and receiving digital data and being coupled, across a data link, to a computing device as claimed in any one of claims 165 to 171, wherein the interface is adapted for sending and receiving digital data as referred to in any one of claims 165 to 171.~~

~~180. A computer implemented method for developing manufacturing parameters for manufacturing an orthopaedic implant for a joint of a patient having an orthopaedic implant articulation surface, the computer implemented method comprising the steps of:~~

~~being responsive to patient specific information data for deriving patient data, the patient specific information data being indicative of one or more dynamic characteristics;~~

~~being responsive to the patient data for calculating design data for the orthopaedic implant; and~~

~~developing the manufacturing parameters for manufacturing the orthopaedic implant according to the design data.~~

PCT/AU2012/000179
Received 04/09/2012

~~181. A computer-implemented method as claimed in claim 180, wherein the patient specific information data comprises 2D imaging data.~~

~~182. A computer-implemented method as claimed in claim 181, wherein the 2D imaging data comprises one or more of: X-Ray data and visual fluoroscopy data.~~

~~183. A computer-implemented method as claimed in claim 180, wherein the patient specific information data comprises 3D imaging data.~~

~~184. A computer-implemented method as claimed in claim 183, wherein the 3D imaging data comprises one or more of: Magnetic Resonance Imaging (MRI) data, Computed Tomography (CT) data, ultrasound data, radiological data, and motion capture data.~~

~~185. A computer-implemented method as claimed in claim 180, wherein the patient specific information data comprises 4D imaging data.~~

~~186. A computer-implemented method as claimed in claim 185, wherein the 4D imaging data comprises motion capture data.~~

~~187. A computer-implemented method as claimed in claim 180, wherein the patient specific information data comprises 2D and 3D imaging data.~~

~~188. A computer-implemented method as claimed in claim 180, wherein the patient specific information data comprises patient acquired data indicative of one or more desired post-implant activities.~~

~~189. A computer-implemented method as claimed in claim 180, wherein the one or more dynamic characteristics comprises a virtual prediction based on one or more of: joint kinematics data; joint loading data; and joint articulation behaviour data during desired post-implant activities.~~

~~190. A computer-implemented method as claimed in claim 189, wherein the virtual prediction comprises a computer model prediction.~~

~~191. A computer-implemented method as claimed in claim 180, wherein, the patient specific information data is indicative of one or more static characteristics.~~

~~192. A computer-implemented method as claimed in claim 191, wherein, the one or more static characteristics comprises one or more load bearing axes of a biomechanical reference frame.~~

~~193. A computer-implemented method as claimed in claim 192, wherein, the one or more load-bearing axes of the biomechanical reference frame comprises a primary load bearing axis.~~

~~194. A computer-implemented method as claimed in claim 191, wherein, the one or more static characteristics comprise one or more load bearing axes of at least one reference frame of the group of biomechanical reference frames comprising: an acetabular reference frame, a femoral reference frame, a tibial reference frame, and a spinal reference frame.~~

~~195. A computer implemented method as claimed in claim 180, wherein the patient specific information data comprises data indicative of one or more physical characteristics of the patient.~~

~~196. A computer-implemented method as claimed in claim 195, wherein the one or more physical characteristics comprises one or more of: age data, gender data, height data, weight data, activity level data, BMI data, body condition data, and body shape data.~~

~~197. A computer-implemented method as claimed in claim 180, the computer-implemented method further comprising the steps of:~~

~~receiving patient-acquired data, the patient-acquired data being indicative of one or more desired post-implant activities, the patient acquired data comprising post-implant activities preference data;~~

~~being responsive to the post-implant activities preference data for calculating post-implant design data for the orthopaedic implant; and~~

~~developing the manufacturing parameters for manufacturing the orthopaedic implant further according to the post-implant design data.~~

PCT/AU2012/000179
Received 04/09/2012

~~198. A computer-implemented method as claimed in claim 197, wherein the post-implant activities preference data is a preference ratio being indicative of comparative patient preference for the one or more desired post-implant activities.~~

~~199. A computer-implemented method as claimed in claim 197, the computer-implemented method further comprising the step of:~~

~~accessing a database of library design data, wherein the manufacturing parameters for manufacturing the orthopaedic implant are further developed according to the library design data.~~

~~200. A computer-implemented method as claimed in claim 199, wherein the library design data comprises data relating to a group of available orthopaedic implants for performing at least one of the one or more desired post-implant activities.~~

~~201. A computer-implemented method as claimed in claim 199, wherein the library design data comprises data relating to a group of patients fitted with an orthopaedic implant for performing at least one of the one or more desired post-implant activities.~~

~~202. A method for manufacturing an orthopaedic implant for a joint of a patient having an orthopaedic implant articulation surface, the method comprising the steps of:~~

~~developing manufacturing parameters using the computer-implemented method as claimed in any one of claims 180 to 201; and~~

~~manufacturing the orthopaedic implant according to the manufacturing parameters.~~

~~203. A method as claimed in claim 202, wherein the orthopaedic implant is manufactured using a manufacturing process, comprising one or both of: an additive manufacturing process, and a subtractive manufacturing process.~~

~~204. A method as claimed in claim 203, wherein the additive manufacturing process comprises one or more of: stereolithography (SLA), selective laser sintering (SLS), direct metal laser sintering (DMLS), electron beam melting (EBM), and 3D printing (3DP).~~

PCT/AU2012/000179
Received 04/09/2012

~~205. A method as claimed in claim 203, wherein the subtractive manufacturing process comprises one or more of: biomachining, abrasive flow machining, abrasive jet machining, milling, laser cutting, and water jet cutting.~~

~~206. An orthopaedic implant for a joint of a patient having an orthopaedic implant articulation surface manufactured using the method as claimed in any one of claims 202 to 205.~~

~~207. A computing device for developing manufacturing parameters for manufacturing an orthopaedic implant for a joint of a patient having an orthopaedic implant articulation surface, the computing device comprising:~~

- ~~a processor for processing digital data;~~
- ~~a memory device for storing digital data including computer program code and being coupled to the processor via a bus; and~~
- ~~a data interface for sending and receiving digital data and being coupled to the processor via the bus, wherein the processor is controlled by the computer program code to:~~
  - ~~receive, via the data interface, patient specific information data for deriving patient data, the patient specific information being indicative of one or more dynamic characteristics;~~
  - ~~calculate patient data according to the patient specific information data;~~
  - ~~calculate design data for the orthopaedic implant according to the patient data; and~~
  - ~~calculate the manufacturing parameters for manufacturing the orthopaedic implant according to the design data.~~

~~208. A computing device as claimed in claim 207, wherein the patient specific information data comprises 2D imaging data.~~

PCT/AU2012/000179
Received 04/09/2012

~~209. A computing device as claimed in claim 208, wherein the 2D imaging data comprises one or more of: X-Ray data and visual fluoroscopy data.~~

~~210. A computing device as claimed in claim 207, wherein the patient specific information data comprises 3D imaging data.~~

~~211. A computing device as claimed in claim 210, wherein the 3D imaging data comprises one or more of: Magnetic Resonance Imaging (MRI) data, Computed Tomography (CT) data, ultrasound data, radiological data, and motion capture data.~~

~~212. A computing device as claimed in claim 207, wherein the patient specific information data comprises 4D imaging data.~~

~~213. A computing device as claimed in claim 212, wherein the 4D imaging data comprises motion capture data.~~

~~214. A computing device as claimed in claim 207, wherein the patient specific information data comprises 2D and 3D imaging data.~~

~~215. A computing device as claimed in claim 207, wherein the patient specific information data comprises patient acquired data indicative of one or more desired post-implant activities.~~

~~216. A computing device as claimed in claim 207, wherein the one or more dynamic characteristics comprises a virtual prediction based on one or more of: joint kinematics data; joint loading data; and joint articulation behaviour data during desired post-implant activities.~~

~~217. A computing device as claimed in claim 216, wherein the virtual prediction comprises a computer model prediction.~~

~~218. A computing device as claimed in claim 207, wherein, the patient specific information data is indicative of one or more static characteristics.~~

~~219. A computing device as claimed in claim 218, wherein, the one or more static characteristics comprises one or more load bearing axes of a biomechanical reference frame.~~

PCT/AU2012/000179
Received 04/09/2012

~~220. A computing device as claimed in claim 219, wherein, the one or more load bearing axes of the biomechanical reference frame comprises a primary load bearing axis.~~

~~221. A computing device as claimed in claim 218, wherein, the one or more static characteristics comprise one or more load bearing axes of at least one reference frame of the group of biomechanical reference frames comprising: an acetabular reference frame, a femoral reference frame, a tibial reference frame, and a spinal reference frame.~~

~~222. A computing device as claimed in claim 207, wherein the patient specific information data comprises data indicative of one or more physical characteristics of the patient.~~

~~223. A computing device as claimed in claim 222, wherein the one or more physical characteristics comprises one or more of: age data, gender data, height data, weight data, activity level data, BMI data, body condition data, and body shape data.~~

~~224. A computing device as claimed in claim 207, wherein the processor is further controlled by the computer program code to:~~

- ~~receive, via the data interface, patient acquired data being indicative of one or more desired post-implant activities, the patient acquired data comprising post-implant activities preference data;~~
- ~~calculate post implant design data for the orthopaedic implant according to the post-implant activities preference data; and~~
- ~~calculate the manufacturing parameters for manufacturing the orthopaedic implant according to the post-implant design data.~~

~~225. A computing device as claimed in claim 224, wherein the post-implant activities preference data is a preference ratio being indicative of comparative patient preference for the one or more desired post-implant activities.~~

~~226. A computing device as claimed in claim 224, further comprising a database for storing digital data including library design data, the database being coupled to the~~

PCT/AU2012/000179
Received 04/09/2012

~~processor, wherein the processor is further controlled by the computer program code to:~~

- ~~load from the database, the library design data, wherein the manufacturing parameters for manufacturing the orthopaedic implant are further calculated according to the library design data.~~

~~227. A computing device as claimed in claim 226, wherein the library design data comprises data relating to a group of available orthopaedic implants for performing at least one of the one or more desired post-implant activities.~~

~~228. A computing device as claimed in claim 226, wherein the library design data comprises data relating to a group of patients fitted with an orthopaedic implant for performing at least one of the one or more desired post-implant activities.~~

~~229. A computer readable storage medium comprising computer program code instructions, being executable by a computer, for:~~

- ~~receiving, via a data interface, patient specific information data for deriving patient data, the patient specific information being indicative of one or more dynamic characteristics;~~

- ~~calculating patient data according to the patient specific information data;~~

- ~~calculating design data for an orthopaedic implant according to the patient data; and~~

- ~~calculating manufacturing parameters for manufacturing the orthopaedic implant according to the design data.~~

~~230. A computer readable storage medium as claimed in claim 229, wherein the patient specific information data comprises 2D imaging data.~~

~~231. A computer readable storage medium as claimed in claim 230 wherein the 2D imaging data comprises one or more of: X-Ray data and visual fluoroscopy data.~~

~~232. A computer readable storage medium as claimed in claim 229, wherein the patient specific information data comprises 3D imaging data.~~

PCT/AU2012/000179
Received 04/09/2012

~~233. A computer readable storage medium as claimed in claim 232, wherein the 3D imaging data comprises one or more of: Magnetic Resonance Imaging (MRI) data, Computed Tomography (CT) data, ultrasound data, radiological data, and motion capture data.~~

~~234. A computer readable storage medium as claimed in claim 229, wherein the patient specific information data comprises 4D imaging data.~~

~~235. A computer readable storage medium as claimed in claim 234, wherein the 4D imaging data comprises motion capture data.~~

~~236. A computer readable storage medium as claimed in claim 229, wherein the patient specific information data comprises 2D and 3D imaging data.~~

~~237. A computer readable storage medium as claimed in claim 229, wherein the patient specific information data comprises patient acquired data indicative of one or more desired post implant activities.~~

~~238. A computer readable storage medium as claimed in claim 229, wherein the one or more dynamic characteristics comprises a virtual prediction based on one or more of: joint kinematics data; joint loading data; and joint articulation behaviour data during desired post implant activities.~~

~~239. A computer readable storage medium as claimed in claim 238, wherein the virtual prediction comprises a computer model prediction.~~

~~240. A computer readable storage medium as claimed in claim 229, wherein, the patient specific information data is indicative of one or more static characteristics.~~

~~241. A computer readable storage medium as claimed in claim 240, wherein, the one or more static characteristics comprises one or more load bearing axes of a biomechanical reference frame.~~

~~242. A computer readable storage medium as claimed in claim 241, wherein, the one or more load bearing axes of the biomechanical reference frame comprises a primary load bearing axis.~~

~~243. A computer readable storage medium as claimed in claim 240, wherein, the one or more static characteristics comprise one or more load bearing axes of at least one reference frame of the group of biomechanical reference frames comprising: an acetabular reference frame, a femoral reference frame, a tibial reference frame, and a spinal reference frame.~~

~~244. A computer readable storage medium as claimed in claim 229, wherein the patient specific information data comprises data indicative of one or more physical characteristics of the patient.~~

~~245. A computer readable storage medium as claimed in claim 244, wherein the one or more physical characteristics comprises one or more of: age data, gender data, height data, weight data, activity level data, BMI data, body condition data, and body shape data.~~

~~246. A computer readable storage medium as claimed in claim 229, further comprising instructions for:~~

- ~~receiving, via the data interface, patient acquired data being indicative of one or more desired post implant activities, the patient acquired data comprising post implant activities preference data;~~
- ~~calculating post implant design data according to the post implant activities preference data; and~~
- ~~calculating manufacturing parameters for manufacturing the orthopaedic implant according to the post implant design data.~~

~~247. A computer readable storage medium as claimed in claim 246, wherein the post implant activities preference data is a preference ratio being indicative of comparative patient preference for the one or more desired post implant activities.~~

~~248. A computer readable storage medium as claimed in claim 246, further comprising instruction for:~~

PCT/AU2012/000179
Received 04/09/2012

~~loading from a database, library design data, wherein the manufacturing parameters for manufacturing the orthopaedic implant are further calculated according to the library design data.~~

~~249. A computer readable storage medium as claimed in claim 248, wherein the library design data comprises data relating to a group of available orthopaedic implants for performing at least one of the one or more desired post implant activities.~~

~~250. A computer readable storage medium as claimed in claim 248, wherein the library design data comprises data relating to a group of patients fitted with an orthopaedic implant for performing at least one of the one or more desired post-implant activities.~~

~~251. A computer implemented method for developing manufacturing parameters for manufacturing a custom articulation for attachment to an orthopaedic implant, the computer implemented method comprising the steps of:~~

~~receiving design data according to the computer implemented method as claimed in any one of claims 180 to 201; and~~

~~developing the manufacturing parameters for manufacturing the custom articulation according to the design data.~~

~~252. A computer implemented method as claimed in claim 251, the computer-implemented method further comprising the steps of:~~

~~receiving post implant design data according to the computer implemented method as claimed in any one of claims 180 197 to 201; and~~

~~developing the manufacturing parameters for manufacturing the custom implant further according to the post implant design data.~~

~~253. A computer implemented method as claimed in claim 251, further comprising instruction for:the step of~~

PCT/AU2012/000179
Received 04/09/2012

~~accessing a database of library design data, wherein the manufacturing parameters for manufacturing the custom implant are further developed according to the library design data.~~

~~254. A computer implemented method as claimed in claim 253, wherein the library design data comprises data relating to a group of available orthopaedic implants for performing at least one of the one or more desired post-implant activities.~~

~~255. A computer implemented method as claimed in claim 253, wherein the library design data comprises data relating to a group of patients fitted with an orthopaedic implant for performing at least one of the one or more desired post-implant activities.~~

~~256. A method for manufacturing a custom articulation for attachment to an orthopaedic implant, the method comprising the steps of:~~

~~developing manufacturing parameters using the computer implemented method as claimed in any one of claims 251 to 255; and~~

~~manufacturing the custom articulation according to the manufacturing parameters.~~

~~257. A method as claimed in claim 256, wherein the custom articulation is manufactured using a manufacturing process, comprising one or both of: an additive manufacturing process, and a subtractive manufacturing process.~~

~~258. A method as claimed in claim 257, wherein the additive manufacturing process comprises one or more of: stereolithography (SLA), selective laser sintering (SLS), direct metal laser sintering (DMLS), electron beam melting (EBM), and 3D printing (3DP).~~

~~259. A method as claimed in claim 257, wherein the subtractive manufacturing process comprises one or more of: biomachining, abrasive flow machining, abrasive jet machining, milling, laser cutting, and water jet cutting.~~

~~260. A custom articulation for attachment to an orthopaedic implant manufactured using the method as claimed in any one of claims 256 to 259.~~

PCT/AU2012/000179
Received 04/09/2012

MARKED UP COPY

~~261. A computing device for developing manufacturing parameters for manufacturing a custom articulation for attachment to an orthopaedic implant, the computing device comprising:~~

~~a processor for processing digital data;~~

~~a memory device for storing digital data including computer program code and being coupled to the processor via a bus; and~~

~~a data interface for sending and receiving digital data and being coupled to the processor via the bus, wherein the processor is controlled by the computer program code to:~~

~~receive, via the data interface, design data according to the computer-implemented method as claimed in any one of claims 180 to 201; and~~

~~calculate the manufacturing parameters for manufacturing the custom articulation according to the design data.~~

~~262. A computing device as claimed in claim 261, wherein the processor is further controlled by the computer program code to:~~

~~receive, via the data interface, post-implant design data according to the computer-implemented method as claimed in any one of claims 180 to 201; and~~

~~calculate the manufacturing parameters for manufacturing the custom articulation according to the post-implant design data.~~

~~263. A computing device as claimed in claim 262, further comprising a database for storing digital data including library design data, the database being coupled to the processor, wherein the processor is further controlled by the computer program code to:~~

~~load from the database, the library design data, wherein the manufacturing parameters for manufacturing the custom articulation are further calculated according to the library design data.~~

PCT/AU2012/000179
Received 04/09/2012

~~264. A computing device as claimed in claim 263, wherein the library design data comprises data relating to a group of available orthopaedic implants for performing at least one of the one or more desired post-implant activities.~~

~~265. A computing device as claimed in claim 263, wherein the library design data comprises data relating to a group of patients fitted with an orthopaedic implant for performing at least one of the one or more desired post-implant activities.~~

~~266. A computer readable storage medium comprising computer program code instructions, being executable by a computer, for:~~

- ~~receiving, via a data interface, design data as defined according to the computer-implemented method as claimed in any one of claims 180 to 201; and~~
- ~~calculating manufacturing parameters for manufacturing a custom articulation according to the design data.~~

~~267. A computer readable storage medium as claimed in claim 266, further comprising instructions for:~~

- ~~receiving, via the data interface, post-implant design data according to the computer-implemented method as claimed in any one of claims 180 to 201; and~~
- ~~calculating the manufacturing parameters for manufacturing the custom articulation according to the post-implant design data.~~

~~268. A computer readable storage medium as claimed in claim 267, further comprising instruction for:~~

- ~~loading from a database, library design data, wherein the manufacturing parameters for manufacturing the custom articulation are further calculated according to the library design data.~~

PCT/AU2012/000179
Received 04/09/2012

MARKED UP COPY

~~269. A computer readable storage medium as claimed in claim 268, wherein the library design data comprises data relating to a group of available orthopaedic implants for performing at least one of the one or more desired post-implant activities.~~

~~270. A computer readable storage medium as claimed in claim 268, wherein the library design data comprises data relating to a group of patients fitted with an orthopaedic implant for performing at least one of the one or more desired post-implant activities.~~

~~271. A computer implemented method for developing manufacturing parameters for manufacturing a patient specific jig for aligning an orthopaedic implant to a joint of a patient, the computer implemented method comprising the steps of:~~

~~— being responsive to patient specific information data for deriving patient data, the patient specific information data being indicative of one or more dynamic characteristics;~~

~~— being responsive to the patient data for calculating jig design data for the patient specific jig; and~~

~~— developing the manufacturing parameters for manufacturing the patient specific jig according to the jig design data.~~

~~272. A computer implemented method as claimed in claim 271, wherein the patient specific information data comprises patient acquired data indicative of one or more desired post implant activities.~~

~~273. A computer implemented method as claimed in claim 271, wherein the one or more dynamic characteristics comprise a virtual prediction based on one or more of: joint kinematics data; joint loading data; and joint articulation behaviour data during desired post implant activities.~~

~~274. A computer implemented method as claimed in claim 273, wherein the virtual prediction comprises a computer model prediction.~~

~~275. A computer implemented method as claimed in claim 271, wherein the patient specific information data is indicative of one or more static characteristics.~~

PCT/AU2012/000179
Received 04/09/2012

~~276. A computer implemented method as claimed in claim 275, wherein the one or more static characteristics comprises one or more load bearing axes of a biomechanical reference frame.~~

~~277. A computer implemented method as claimed in claim 276, wherein the one or more load bearing axes of the biomechanical reference frame comprises a primary load bearing axis.~~

~~278. A computer implemented method as claimed in claim 275, wherein the one or more static characteristics comprise one or more load bearing axes of at least one reference frame of the group of biomechanical reference frames comprising: an acetabular reference frame, a femoral reference frame, a tibial reference frame, and a spinal reference frame.~~

~~279. A computer implemented method as claimed in claim 271, wherein the patient specific information data comprises 2D imaging data.~~

~~280. A computer implemented method as claimed in claim 279, wherein the 2D imaging data comprises one or more of: X-Ray data and visual fluoroscopy data.~~

~~281. A computer implemented method as claimed in claim 271, wherein the patient specific information data comprises 3D imaging data.~~

~~282. A computer implemented method as claimed in claim 281, wherein the 3D imaging data comprises one or more of: Magnetic Resonance Imaging (MRI) data, Computed Tomography (CT) data, ultrasound data, radiological data, and motion capture data.~~

~~283. A computer implemented method as claimed in claim 271, wherein the patient specific information data comprises 4D imaging data.~~

~~284. A computer implemented method as claimed in claim 283, wherein the 4D imaging data comprises motion capture data.~~

~~285. A computer implemented method as claimed in claim 271, wherein the patient specific information data comprises 2D and 3D imaging data.~~

PCT/AU2012/000179
Received 04/09/2012

~~286. A computer implemented method as claimed in claim 271, wherein the patient specific information data comprises data indicative of one or more physical characteristics of the patient.~~

~~287. A computer implemented method as claimed in claim 286, wherein the one or more physical characteristics comprises one or more of: age data, gender data, height data, weight data, activity level data, BMI data, body condition data, and body shape data.~~

~~288. A method for manufacturing a patient specific jig for aligning an orthopaedic implant to a joint of a patient, the method comprising the steps of:~~

~~— developing manufacturing parameters using the computer implemented method as claimed in any one of claims 271 to 287; and~~

~~— manufacturing the patient specific jig according to the manufacturing parameters.~~

~~289. A method as claimed in claim 288, wherein the patient specific jig is manufactured using a manufacturing process, comprising one or both of: an additive manufacturing process, and a subtractive manufacturing process.~~

~~290. A method as claimed in claim 289, wherein the additive manufacturing process comprises one or more of: stereolithography (SLA), selective laser sintering (SLS), direct metal laser sintering (DMLS), electron beam melting (EBM), and 3D printing (3DP).~~

~~291. A method as claimed in claim 289, wherein the subtractive manufacturing process comprises one or more of: biomachining, abrasive flow machining, abrasive jet machining, milling, laser cutting, and water jet cutting.~~

~~292. A patient specific jig for aligning an orthopaedic implant to a joint of a patient manufactured using the method as claimed in any one of claims 288 to 291.~~

~~293. A computing device for developing manufacturing parameters for manufacturing a patient specific jig for aligning an orthopaedic implant to a joint of a patient, the computing device comprising:~~

PCT/AU2012/000179
Received 04/09/2012

~~a processor for processing digital data;~~

~~a memory device for storing digital data including computer program code and being coupled to the processor via a bus; and~~

~~a data interface for sending and receiving digital data and being coupled to the processor via the bus, wherein the processor is controlled by the computer program code to:~~

~~receive, via the data interface, patient specific information data for deriving patient data, the patient specific information data being indicative of one or more dynamic characteristics;~~

~~calculate patient data according to the patient specific information data;~~

~~calculate jig design data for the patient specific jig according to the patient data; and~~

~~calculate the manufacturing parameters for manufacturing the patient specific jig according to the jig design data.~~

~~294. A computing device as claimed in claim 293, wherein the patient specific information data comprises patient acquired data indicative of one or more desired post implant activities.~~

~~295. A computing device as claimed in claim 293, wherein the one or more dynamic characteristics comprise a virtual prediction based on one or more of: joint kinematics data; joint loading data; and joint articulation behaviour data during desired post implant activities.~~

~~296. A computing device as claimed in claim 295, wherein the virtual prediction comprises a computer model prediction.~~

~~297. A computing device as claimed in claim 293, wherein the patient specific information data is indicative of one or more static characteristics.~~

PCT/AU2012/000179
Received 04/09/2012

~~298. A computer-implemented method as claimed in claim 297, wherein the one or more static characteristics comprises one or more load-bearing axes of a biomechanical reference frame.~~

~~299. A computing device as claimed in claim 298, wherein the one or more load bearing axes of the biomechanical reference frame comprises a primary load bearing axis.~~

~~300. A computing device as claimed in claim 297, wherein the one or more static characteristics comprise one or more load bearing axes of at least one reference frame of the group of biomechanical reference frames comprising: an acetabular reference frame, a femoral reference frame, a tibial reference frame, and a spinal reference frame.~~

~~301. A computing device as claimed in claim 293, wherein the patient specific information data comprises 2D imaging data.~~

~~302. A computing device as claimed in claim 301, wherein the 2D imaging data comprises one or more of: X-Ray data and visual fluoroscopy data.~~

~~303. A computing device as claimed in claim 293, wherein the patient specific information data comprises 3D imaging data.~~

~~304. A computing device as claimed in claim 303, wherein the 3D imaging data comprises one or more of: Magnetic Resonance Imaging (MRI) data, Computed Tomography (CT) data, ultrasound data, radiological data, and motion capture data.~~

~~305. A computing device as claimed in claim 293, wherein the patient specific information data comprises 4D imaging data.~~

~~306. A computing device as claimed in claim 305, wherein the 4D imaging data comprises motion capture data.~~

~~307. A computing device as claimed in claim 293, wherein the patient specific information data comprises 2D and 3D imaging data.~~

PCT/AU2012/000179
Received 04/09/2012

~~308. A computing device as claimed in claim 293, wherein the patient specific information data comprises data indicative of one or more physical characteristics of the patient.~~

~~309. A computing device as claimed in claim 308, wherein the one or more physical characteristics comprises one or more of: age data, gender data, height data, weight data, activity level data, BMI data, body condition data, and body shape data.~~

~~310. A computer readable storage medium comprising computer program code instructions, being executable by a computer, for:~~

- ~~receiving, via a data interface, patient specific information data for deriving patient data, the patient specific information data being indicative of one or more dynamic characteristics;~~
- ~~calculating patient data according to the patient specific information data;~~
- ~~calculating jig design data for a patient specific jig according to the patient data; and~~
- ~~calculating manufacturing parameters for manufacturing the patient specific jig according to the jig design data.~~

~~311. A computer readable storage medium as claimed in claim 310, wherein the patient specific information data comprises patient acquired data indicative of one or more desired post implant activities.~~

~~312. A computer readable storage medium as claimed in claim 310, wherein the one or more dynamic characteristics comprise a virtual prediction based on one or more of: joint kinematics data; joint loading data; and joint articulation behaviour data during desired post implant activities.~~

~~313. A computer readable storage medium as claimed in claim 312, wherein the virtual prediction comprises a computer model prediction.~~

~~314. A computer readable storage medium as claimed in claim 310, wherein the patient specific information data is indicative of one or more static characteristics.~~

PCT/AU2012/000179
Received 04/09/2012

~~315. A computer readable storage medium as claimed in claim 314, wherein the one or more static characteristics comprises one or more load bearing axes of a biomechanical reference frame.~~

~~316. A computer readable storage medium as claimed in claim 315, wherein the one or more load bearing axes of the biomechanical reference frame comprises a primary load bearing axis.~~

~~317. A computer readable storage medium as claimed in claim 314, wherein the one or more static characteristics comprise one or more load bearing axes of at least one reference frame of the group of biomechanical reference frames comprising: an acetabular reference frame, a femoral reference frame, a tibial reference frame, and a spinal reference frame.~~

~~318. A computer readable storage medium as claimed in claim 310, wherein the patient specific information data comprises 2D imaging data.~~

~~319. A computer readable storage medium as claimed in claim 318, wherein the 2D imaging data comprises one or more of: X-Ray data and visual fluoroscopy data.~~

~~320. A computer readable storage medium as claimed in claim 310, wherein the patient specific information data comprises 3D imaging data.~~

~~321. A computer readable storage medium as claimed in claim 320, wherein the 3D imaging data comprises one or more of: Magnetic Resonance Imaging (MRI) data, Computed Tomography (CT) data, ultrasound data, radiological data, and motion capture data.~~

~~322. A computer readable storage medium as claimed in claim 310, wherein the patient specific information data comprises 4D imaging data.~~

~~323. A computer readable storage medium as claimed in claim 322, wherein the 4D imaging data comprises motion capture data.~~

~~324. A computer readable storage medium as claimed in claim 310, wherein the patient specific information data comprises 2D and 3D imaging data.~~

PCT/AU2012/000179
Received 04/09/2012

MARKED UP COPY

~~325. A computer readable storage medium as claimed in claim 310, wherein the patient specific information data comprises data indicative of one or more physical characteristics of the patient.~~

~~326. A computer readable storage medium as claimed in claim 325, wherein the one or more physical characteristics comprises one or more of: age data, gender data, height data, weight data, activity level data, BMI data, body condition data, and body shape data.~~

~~327.~~31. A computer-implemented method for calculating implant design data for a group of orthopaedic implants, the computer-implemented method comprising the steps of:

- receiving patient library data;
- receiving implant range data; and
- calculating the implant design data for the group of orthopaedic implants according to the patient library data and the implant range data.

~~328. A computer-implemented method as claimed in claim 327,~~ wherein the patient library data comprises implant parameter data~~alignment information data~~ of multiple orthopaedic implants of multiple patients provided by the computer-implemented method as claimed in any one of claims 1 to ~~24~~28.

~~329.~~32. A computer-implemented method as claimed in claim ~~327~~31, wherein the implant range data is indicative of one or more subsets of the patient library data selected according to a user input request.

~~330.~~33. A computer-implemented method as claimed in claim ~~329~~32, wherein at least one of the one or more subsets comprises patient satisfaction data relating to a number of satisfied patients selected from a group of patients fitted with an orthopaedic implant for performing one or more post-implant activities.

~~331.~~34. A computer-implemented method as claimed in claim ~~329~~32, wherein at least one of the one or more subsets comprises implant activity data relating to a number of

PCT/AU2012/000179
Received 04/09/2012

orthopaedic implants selected from a group of orthopaedic implants for performing one or more post-implant activities.

~~332.~~35. A computer-implemented method as claimed in claim 32~~29~~, wherein at least one of the one or more subsets comprises implant size data relating to a number of orthopaedic implants of a particular size range selected from a group of orthopaedic implants for performing one or more post-implant activities.

~~333.~~36. A computer-implemented method as claimed in claim ~~32~~31, wherein revised patient library data is calculated on the basis of filtering the patient library data according to the implant range data.

~~334.~~37. A computer-implemented method as claimed in claim ~~32~~31, wherein the implant design data is calculated according to a statistical analysis of the revised patient library data.

~~335.~~38. A computer-implemented method as claimed in claim ~~33~~37, wherein the statistical analysis is selected from a group of statistical analyses comprising: regression analysis and least squares analysis.

~~336. A computing device for calculating implant design data for a group of orthopaedic implants, the computing device comprising:~~

~~a processor for processing digital data;~~

~~a memory device for storing digital data including computer program code and being coupled to the processor via a bus; and~~

~~a data interface for sending and receiving digital data and being coupled to the processor via the bus, wherein the processor is controlled by the computer program code to:~~

~~receive, via the data interface, patient library data;~~

~~receive, via the data interface, implant range data; and~~

~~calculate the implant design data for the group of orthopaedic implants according to the patient library data and the implant range data.~~

PCT/AU2012/000179
Received 04/09/2012

~~337. A computing device as claimed in claim 336, wherein the patient library data comprises alignment information data of multiple orthopaedic implants of multiple patients provided by the computer implemented method as claimed in any one of claims 1 to 24.~~

~~338. A computing device as claimed in claim 336, wherein the implant range data is indicative of one or more subsets of the patient library data selected according to a user input request.~~

~~339. A computing device as claimed in claim 338, wherein at least one of the one or more subsets comprises patient satisfaction data relating to a number of satisfied patients selected from a group of patients fitted with an orthopaedic implant for performing one or more post-implant activities.~~

~~340. A computing device as claimed in claim 338, wherein at least one of the one or more subsets comprises implant activity data relating to a number of orthopaedic implants selected from a group of orthopaedic implants for performing one or more post-implant activities.~~

~~341. A computing device as claimed in claim 338, wherein at least one of the one or more subsets comprises implant size data relating to a number of orthopaedic implants of a particular size range selected from a group of orthopaedic implants for performing one or more post-implant activities.~~

~~342. A computing device as claimed in claim 336, wherein revised patient library data is calculated on the basis of filtering the patient library data according to the implant range data.~~

~~343. A computing device as claimed in claim 342, wherein the implant design data is calculated according to a statistical analysis of the revised patient library data.~~

~~344. A computing device as claimed in claim 343, wherein the statistical analysis is selected from a group of statistical analyses comprising: regression analysis and least squares analysis.~~

~~345. A computer readable storage medium comprising computer program code instructions, being executable by a computer, for:~~

PCT/AU2012/000179
Received 04/09/2012

~~receiving, via a data interface, patient library data;~~

~~receiving, via the data interface, implant range data; and~~

~~calculating implant design data for a group of orthopaedic implants according to the patient library data and the implant range data.~~

~~346. A computer readable storage medium as claimed in claim 345, wherein the patient library data comprises alignment information data of multiple orthopaedic implants of multiple patients provided by the computer-implemented method as claimed in any one of claims 1 to 24.~~

~~347. A computer readable storage medium as claimed in claim 345, wherein the implant range data is indicative of one or more subsets of the patient library data selected according to a user input request.~~

~~348. A computer readable storage medium as claimed in claim 347, wherein at least one of the one or more subsets comprises patient satisfaction data relating to a number of satisfied patients selected from a group of patients fitted with an orthopaedic implant for performing one or more post-implant activities.~~

~~349. A computer readable storage medium as claimed in claim 347, wherein at least one of the one or more subsets comprises implant activity data relating to a number of orthopaedic implants selected from a group of orthopaedic implants for performing one or more post-implant activities.~~

~~350. A computer readable storage medium as claimed in claim 347, wherein at least one of the one or more subsets comprises implant size data relating to a number of orthopaedic implants of a particular size range selected from a group of orthopaedic implants for performing one or more post-implant activities.~~

~~351. A computer readable storage medium as claimed in claim 345, wherein revised patient library data is calculated on the basis of filtering the patient library data according to the implant range data.~~

PCT/AU2012/000179
Received 04/09/2012

MARKED UP COPY

~~352. A computer readable storage medium as claimed in claim 351, wherein the implant design data is calculated according to a statistical analysis of the revised patient library data.~~

~~353. A computer readable storage medium as claimed in claim 352, wherein the statistical analysis is selected from a group of statistical analyses comprising: regression analysis and least squares analysis.~~

~~354. A client computing device comprising an interface for sending and receiving digital data and being coupled, across a data link, to a computing device as claimed in any one of claims 336 to 344, wherein the interface is adapted for sending and receiving digital data as referred to in any one of claims 336 to 344.~~